Installation Instructions:
SB1
SERVICE BODY
48” - 50” Wide Only

TOOLS REQUIRED:

- **Drill**
- **5/16” drill bit**
- **3/8” socket**
- **Needle nose pliers**

CONTENTS:

- **Service body system**
- **Hardware bag (inside drawer)**
- **(6)** 2” SS screws
- **(24)** 1/4” and 1/2” wide nylon spacers
- **(6)** Rubber-backed washers
- **(6)** Flanged nuts
- **(1)** Self-etching primer
- **(6)** Thread protector caps

Register your system at www.decked.com/warranty

FOLLOW US: @DECKEDUSA | #DECKEDUSA

VERSION 4

DECKED.COM | 208.806.0251

INSTALL STEPS

(THIS INSTALL IS SIMPLE. THERE ARE ONLY 4 STEPS!)

STEP 1: Remove the aluminum sideboards, rotate and replace as shown.

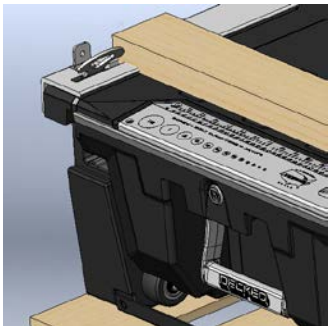

PRE-ASSEMBLED SIDEBOARDS

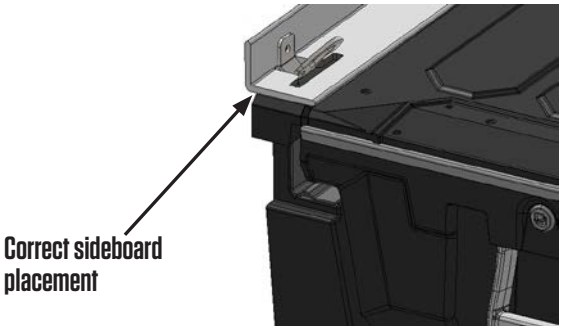

ASSEMBLED SIDEBOARDS

STEP 2: Grab 3 friends or coworkers (1 person in each corner) and lift the DECKED system into bed of vehicle. Slowly slide into place. If you have an 8' system, you will have remaining space cabside as shown. **NOTE: Make sure you can close the tailgate.**

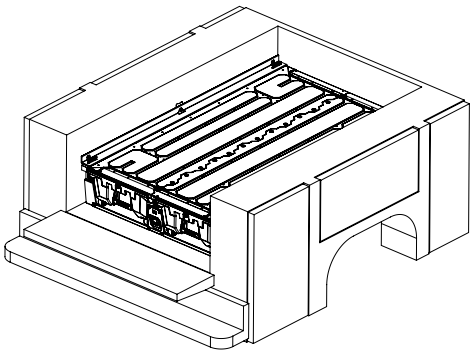

6'5" BED SERVICE BODY

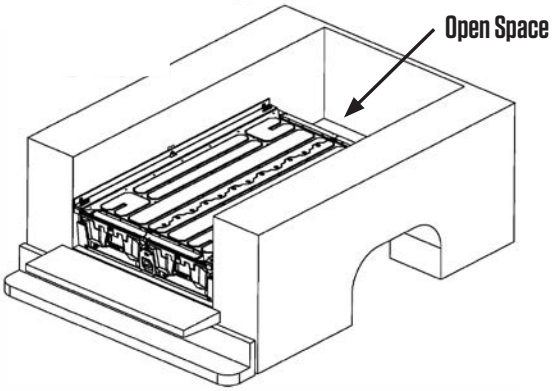

8' BED SERVICE BODY

STEP 3: Make sure DECKED system is in the correct position. Using bracket holes as guides, drill 6 holes (3 on each sideboard) through the aluminum sideboards and service body wall with a 5/16" drill bit. Seal with self-etching primer. Make sure holes are straight.

▼ THIS STEP IS IMPORTANT ▼

STEP 4: **Make sure sideboards are flush against service body wall and the brackets are as FAR from the sideboards, inward as possible.** Fill gap with as many spacers that will fit between bracket and sideboard. Hold spacers with pliers. Push screw through bracket, spacers, sideboard and service body wall and install with rubber backed washer (rubber side facing service body) and nut. Repeat all 6 brackets.

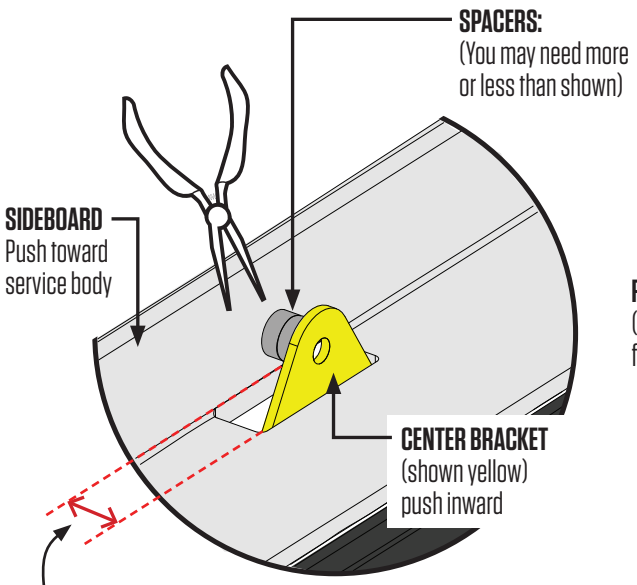

A). Use pliers to place and hold as many spacers as possible between the sideboard and bracket.

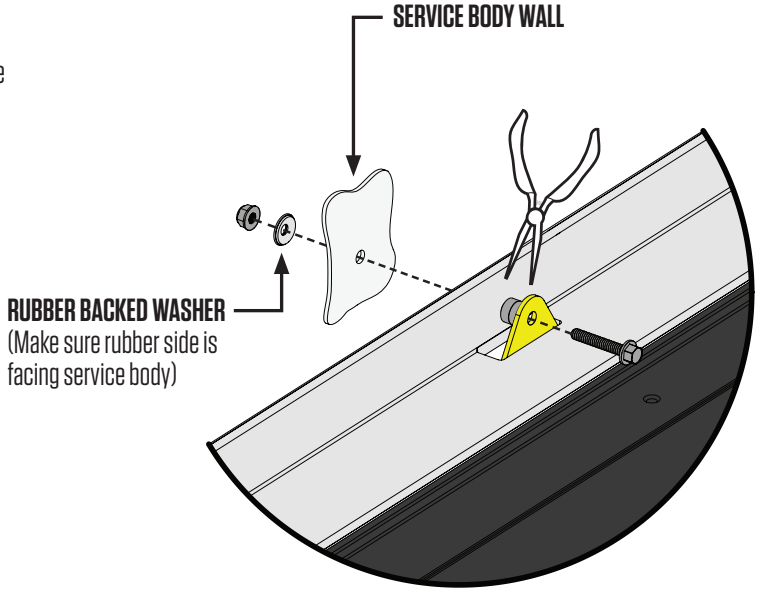

B). Push screw through bracket, spacers, sideboard and service body wall. Install with rubber backed washer (rubber side facing service body) and nut.

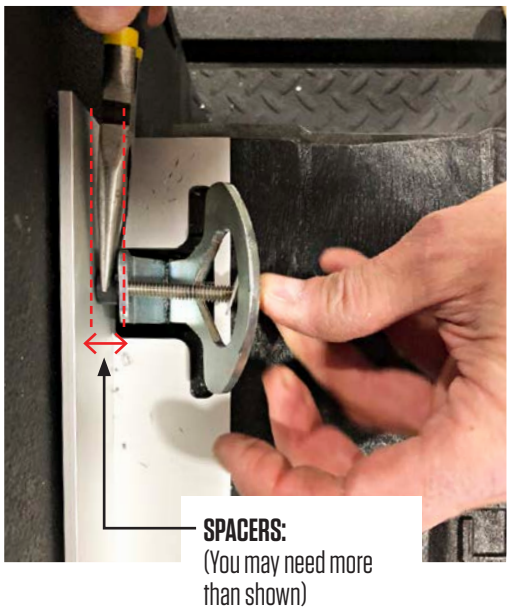

NOTE: Outer brackets will look like the image to the left. Follow same steps as center bracket. Bracket inward. As many spacers as possible. Sideboard flush against service body wall. You get it.

NOTE: TAILGATE HEIGHT

Most service body tailgates sit right around 12" in height. You've probably figured it out by now, but the DECKED system is also 12" in height.

Make sure to secure loads on top of the deck with tie-downs. We also sell Core Trax tie downs, check out DECKED.com/components.

DECKED 3-YEAR LIMITED WARRANTY

DECKED LLC warrants to the original purchaser of this product that the product will be free from manufacturing defects in workmanship and materials for a period of three (3) years from the date of the original purchase. If within three (3) years from the original date of purchase this product fails due to defect in materials or workmanship, DECKED LLC will replace any defective part at its option.

The original purchaser must contact the DECKED LLC customer service team and provide a description of the defective part, including digital pictures if requested, with the original purchase documentation as validation of warranty coverage or have previously activated their warranty online.

This warranty DOES NOT cover or apply to:

- Damage to the product due to misuse, mishandling and abuse.
- Products not used in accordance with the manufacturer's instructions or recommendations.
- Product not assembled or installed according to manufacturer's instructions.
- Normal wear and tear.
- Undeclared damage to the system during shipping, acts of God. In addition, consequential damage and incidental damages (including lost time) such as damage to persons or property are not covered under this warranty.