Installation Instructions:
MN3/MN4

NISSAN FRONTIER
5′ BED LENGTH / 6′ 1″ BED LENGTH
2005-CURRENT

TOOLS REQUIRED

- short 7/32” hex wrench
- 7/16” socket
- 3/8” socket
- electric drill
- 7/16″ drill bit
- 5/16″ drill bit
- drill stop
- 1/8″ hex wrench
- T40 Torx driver

SCAN ME
REGISTER YOUR SYSTEM

SCAN ME
INSTRUCTION VIDEOS

Watch short installation videos at www.decked.com/video | Register your system at www.decked.com/warranty

FOLLOW US: @DECKEDUSA | #DECKEDUSA

VERSION 7

DECKED.COM | 208.806.0251

RC243

CONTENTS

DECKED carton

LEFT DECK HALF - 1
RIGHT DECK HALF - 1
CENTER VERT - 1
CABSIDE VERT - 1
DRAWER - 2
LEFT AMMO CAN - 1
RIGHT AMMO CAN - 1
LEFT STUD - 1
RIGHT STUD - 1
AMMO CAN LID - 2
C-CHANNEL - 2
RULER - 1
HARDWARE BOX - 1
TORSION BRACE - 1
BOTTLE OPENER - 1

Hardware box - unbagged components

(inside DECKED carton):

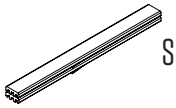

Shims -4

Weather strips - 2

HARDWARE box - bagged components

PREP MN3/MN4 - 1
S1 - 1
S2 - 1
N1 - 1
J7 - 2
DRAWER 1 - 1
DRAWER 2 - 1
WHEELS - 1
FINAL MID - 1
PREP-EXTRA - 1
WASHERS - 1

▼ ASSEMBLY OVERVIEW ▼

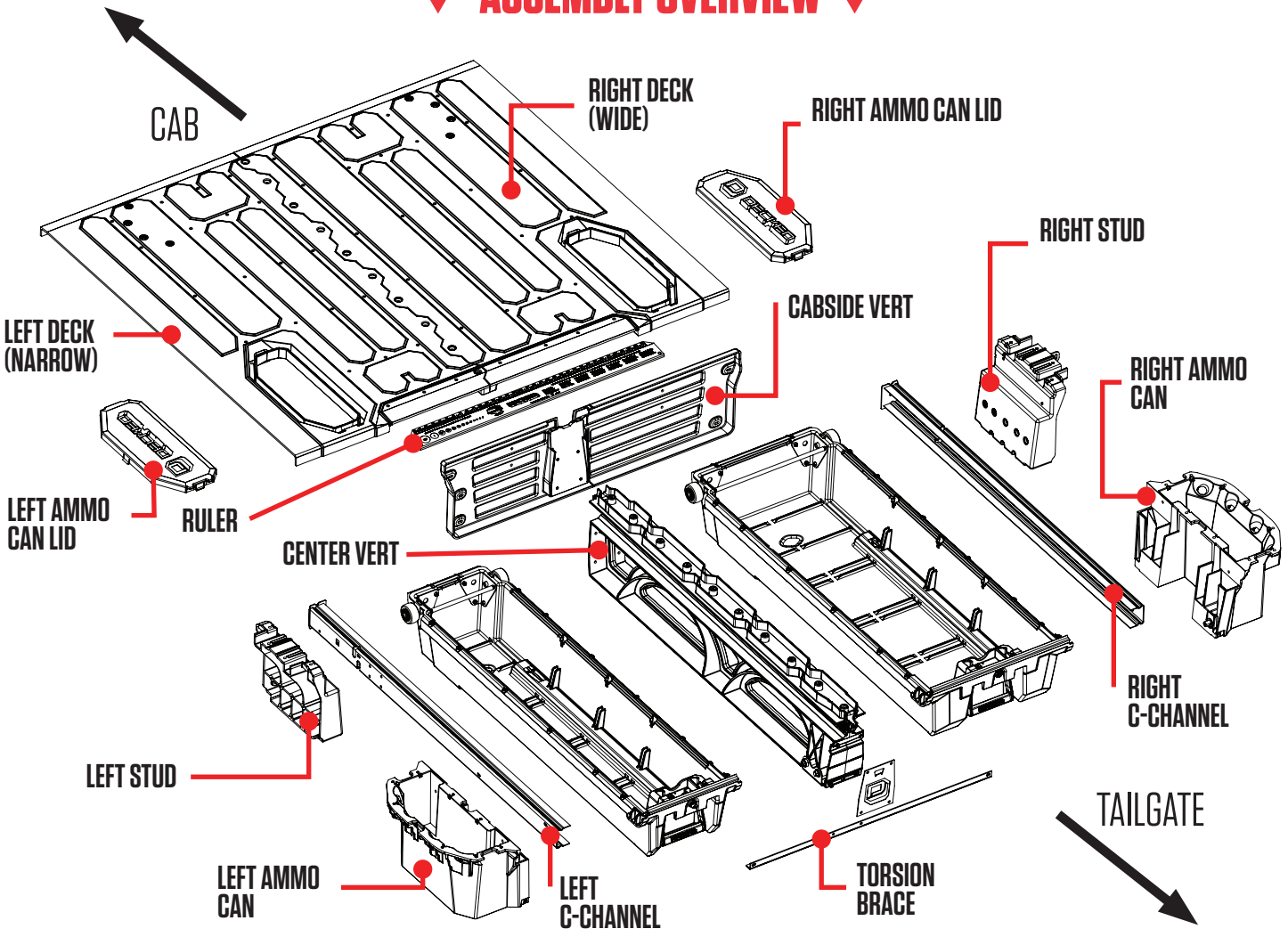

▼ HEY! TORQUE BOY: READ BEFORE YOU INSTALL DECKED ▼

1. **DON'T** go rogue on us, please read the instructions.
2. **DON'T** over tighten bolts, get em' hand-tight.
3. **DON'T** use power tools.
4. If you don't follow directions and do use power tools:
   1). Set clutch at a very low setting.
   2). If you blow it: Two extra threaded inserts are included in **BAG PREP-EXTRA**. That's all you get, unless you call us and ask for more. The inserts will replace any stripped inserts in the tailgate ammo cans and studs or front face of the center vert at the bottle opener, but NOT THE TOP OF THE CENTER VERT, so hand tighten until snug only! You can also screw the inserts back in if dislocated. There is a straight screwdriver slot on the underside of the threaded insert.
5. Start all bolts with fingers to avoid cross-threading.
6. **DON'T** over tighten J-hooks during installation. Just get 'em good and snug; enough to keep the system from moving in the bed.
7. You will have leftover washers – you're welcome.
8. Nice job if you're still reading .

Prevent embarrassing, expletive-filled language,
watch our detailed installation video or give us a call. We're happy to help!

208.806.0251 | DECKED.COM/INSTALLVIDEO

AMMO CAN DRAIN HOLES

(TO DRILL OR NOT TO DRILL.)

- **Do you use a tonneau or shell over your DECKED system?**
  There is no need to drill holes, unless you leave your tonneau open in a deluge.
- **Does your DECKED system live outside?**
  The ammo cans will get water in them. You'll need to drill holes in the ammo cans.
  There are two dimples in the bottom of each ammo can. Drill a 1/2" hole at each dimple.
  A smaller hole will get clogged.

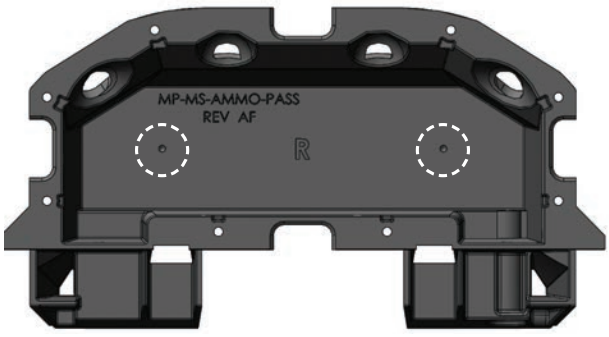

PREP BED: MARK CENTER OF BED

- Use a marking pen or wax pencil to mark a centerline (blue) on the recessed center bead.

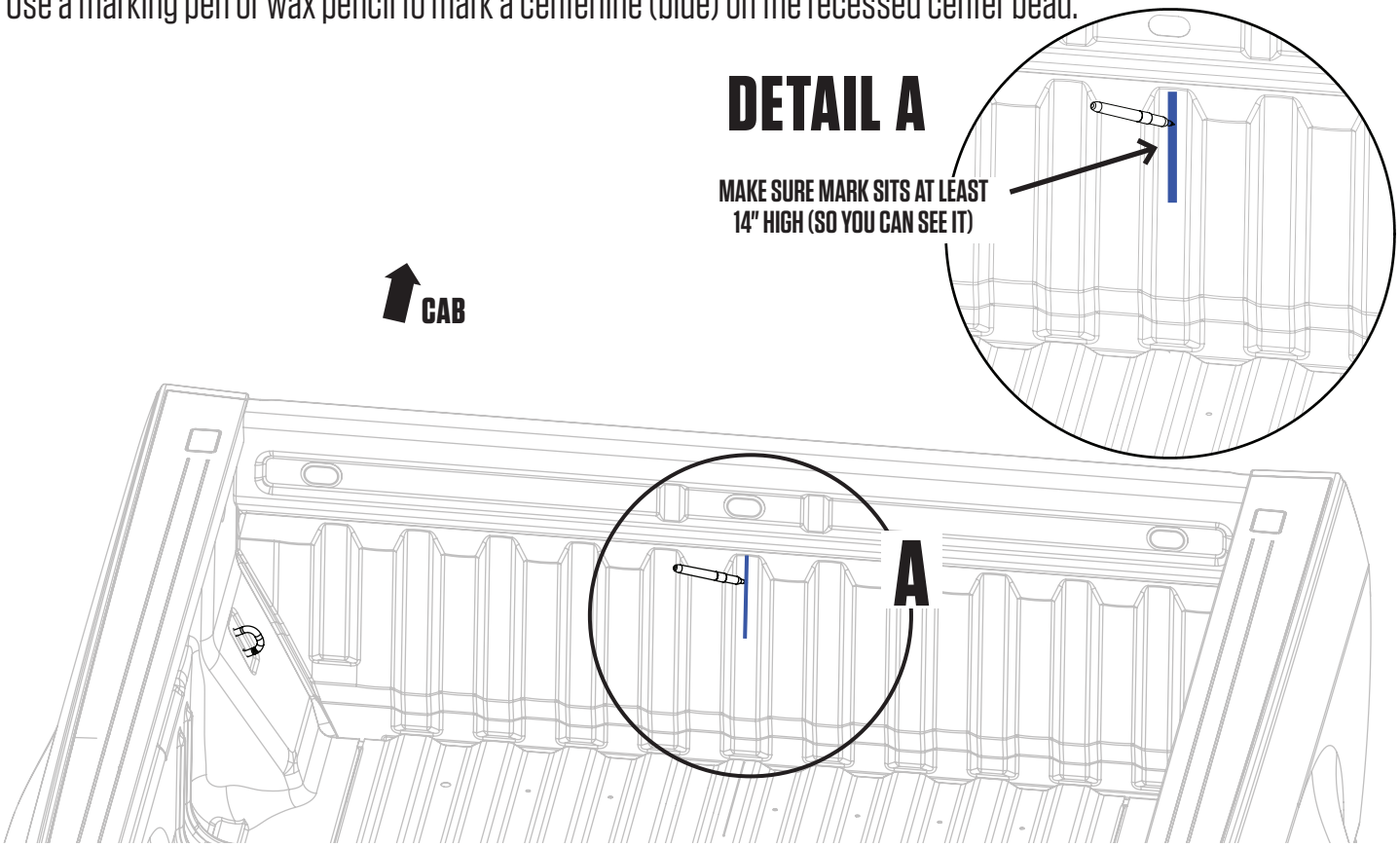

STOP

IMPORTANT!

THE NEXT STEP (SHIM INSTALL) IS DEPENDENT ON THE TRUCK BED LENGTH:

MN3 – 5′ BED LENGTH: GO TO PAGE 5

MN4 – 6′ 1″ BED LENGTH: GO TO PAGE 6

MN3 – PREP BED: SHIMS

STOP: Double check that you have a 5′ bed (MN3). If you have a 6′ 1″ bed (MN4), go to the next page (6).

- **4 DOUBLE STACK SHIMS** that look like this can be found in your hardware kit.
- Using the information below:
  1) Clean the bed surface where the shims will be located. Isopropyl alcohol (do not drink) is recommended.
  2) Remove tape film and apply shim with the strength of 1,000 men a.k.a push really hard.

DETAIL A

Align shim to channel in floor as shown.
Repeat passenger side.

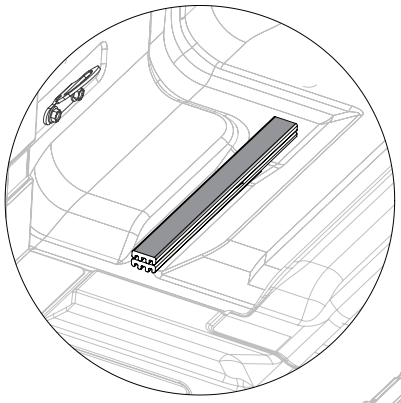

DETAIL B

Align shim to channel in floor as shown. Place shim 5 1/2" from rear of bed (red).

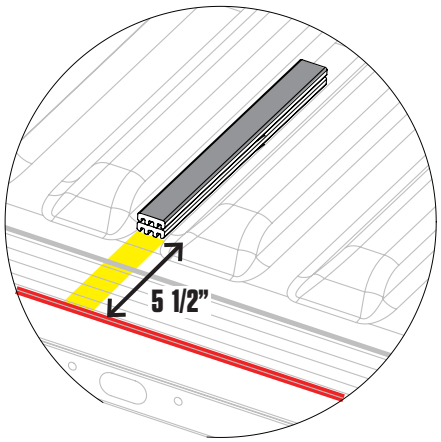

DETAIL C

Align shim to channel in floor shown. Place shim 1" from cabside panel of bed (red).

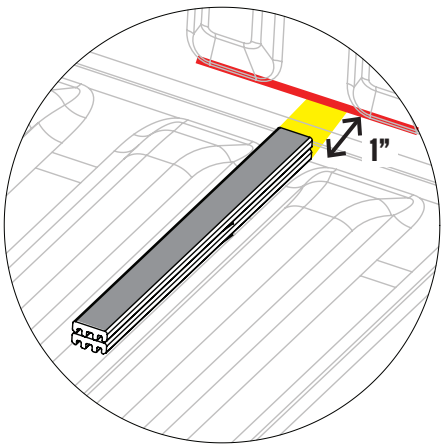

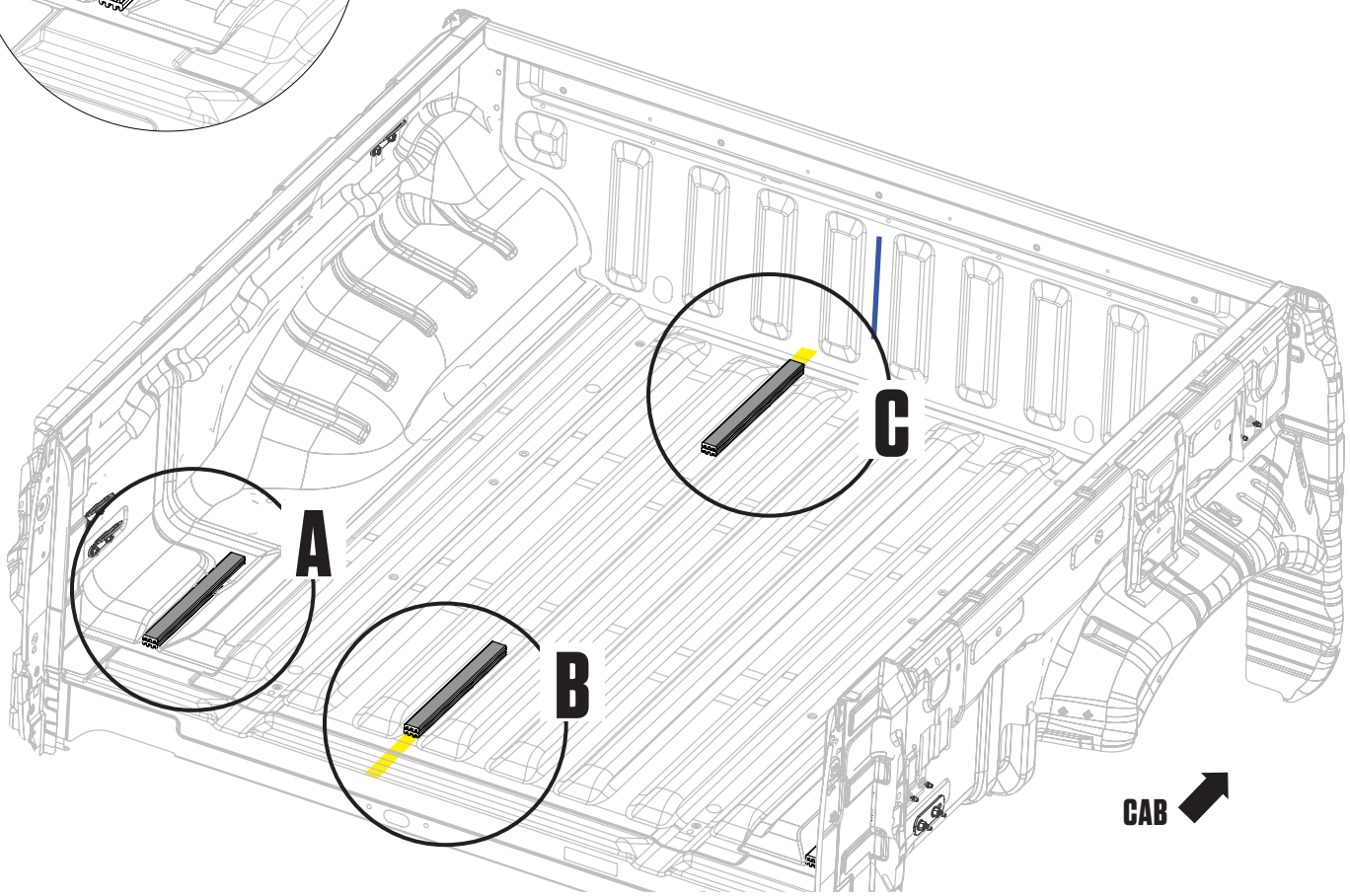

MN4 – PREP BED: SHIMS

STOP: Double check that you have a 6′ 1″ bed (MN4). If you have a 5′ bed (MN3), go to the previous page (5).

- **4 DOUBLE STACK SHIMS** that look like this can be found in your hardware kit.
- Using the information below:
  1) Clean the bed surface where the shims will be located. Isopropyl alcohol (do not drink) is recommended.
  2) Remove tape film and apply shim with the strength of 1,000 men a.k.a push really hard.

DETAIL A

Align shim to channel in floor as shown. Place shim 7" from rear of bed (red).
Repeat passenger side.

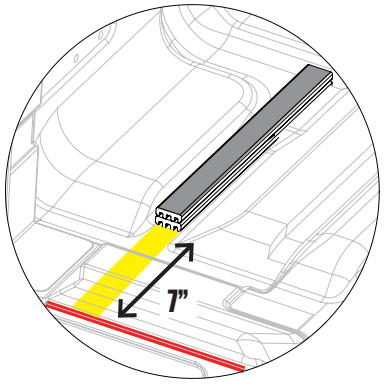

DETAIL B

Align shim to channel in floor shown. Place shim 7 3/4" from rear of bed (red).

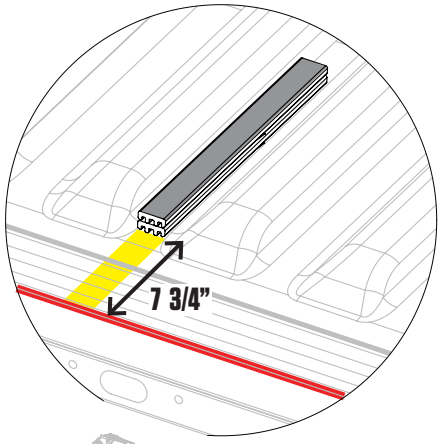

DETAIL C

Align shim to channel in floor shown. Place shim 1" from cabside panel of bed (red).

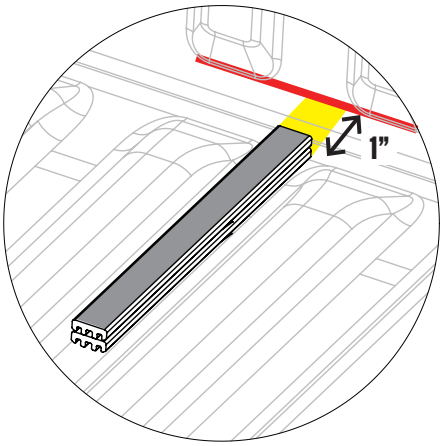

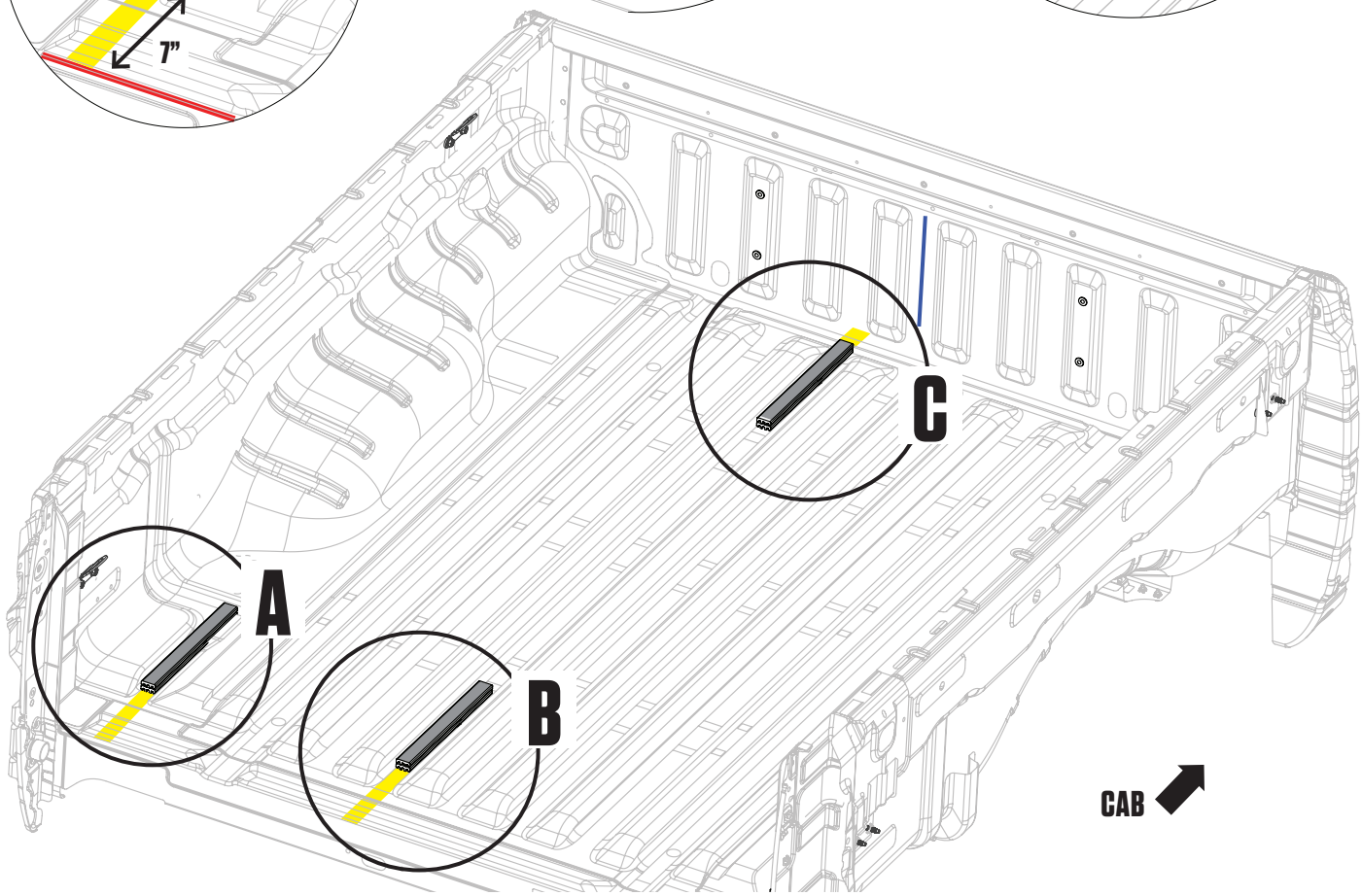

PREP BED: TAILGATE BRACKET

NOTE: You will need to grab a pal for this step (or have incredibly long and flexible arms).

- Remove factory tie down and bolts. Save all factory hardware.

NOTE: If your Nissan Frontier has a Utili-Track™ option, you may not have the tie down brackets at the tailgate end of your truck. But don't worry, we've got you covered! We have included tie down brackets for you along with the bolts, nuts and backerplates you'll need for your install. These are T40 Torx bolts, so you'll need a T40 Torx driver to get 'er done. The holes for the factory tie downs are in the bed. You'll need to reference these for placement of the new tie downs.

DETAIL A: STEP 1: Mark bed as shown (green holes). **STEP 2:** Drill two 5/16" holes that you marked with a 1/4" drill stop. **NOTE: To resist corrosion, seal the raw metal edges of the drilled holes with self-etching primer (available at most auto hardware stores). STEP 3:** Play Rock Paper Scissors with your pal. The loser needs to hold the backing plate inside the wheel well and securely attach with the two factory bolts and two flanged nuts; BAG **PREP MN3/MN4.**

- Repeat passenger side.

RECOMMENDED TORQUE:
Bolts in labeled bag PREP MN3/MN4 - 53 in-lb.

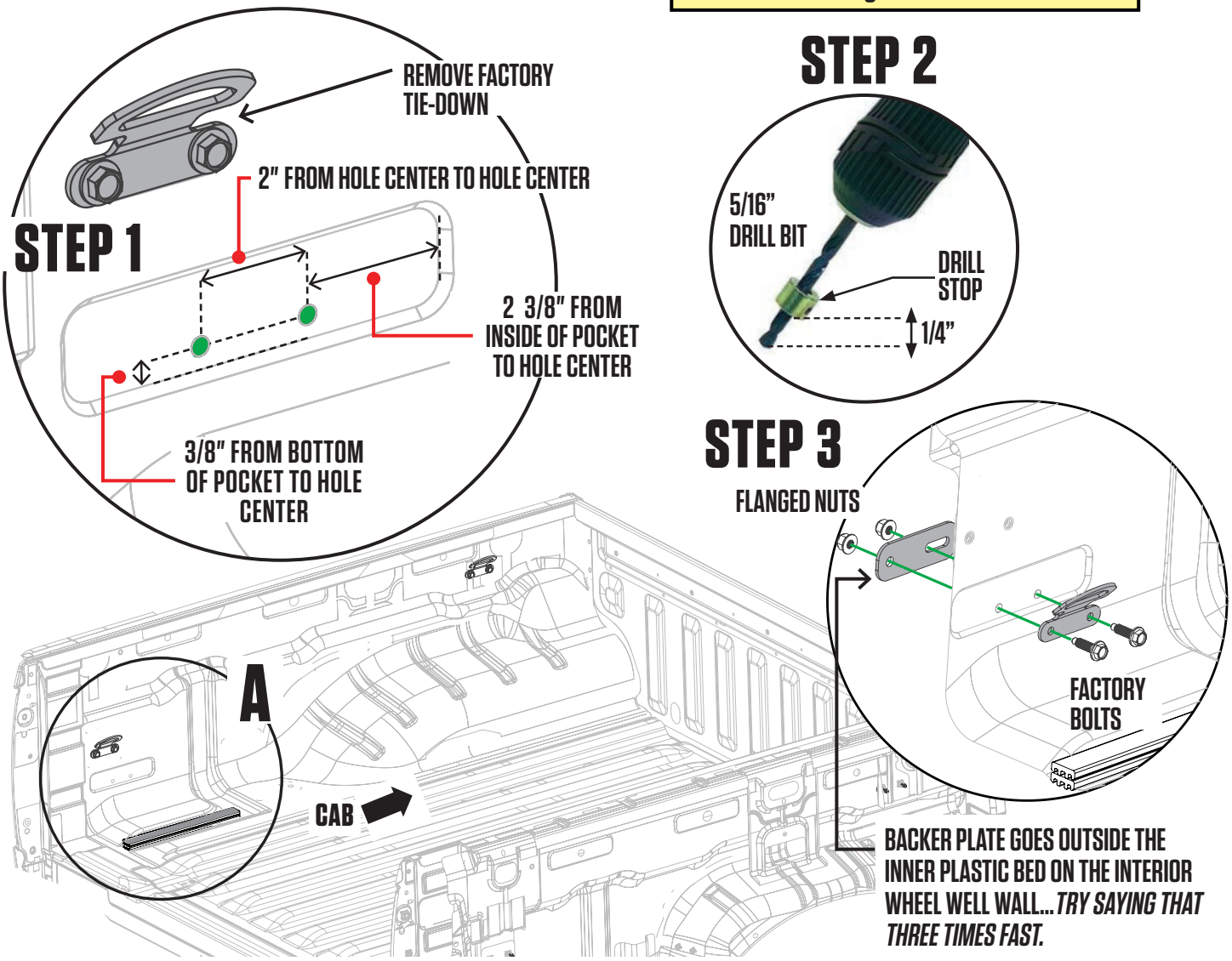

ASSEMBLY: CENTER VERT + CABSIDE VERT

NOTE: Perform the next few steps on a flat surface like a garage floor.

- Attach center vert to cabside vert with four bolts. Alternate to tighten; **BAG S1.**

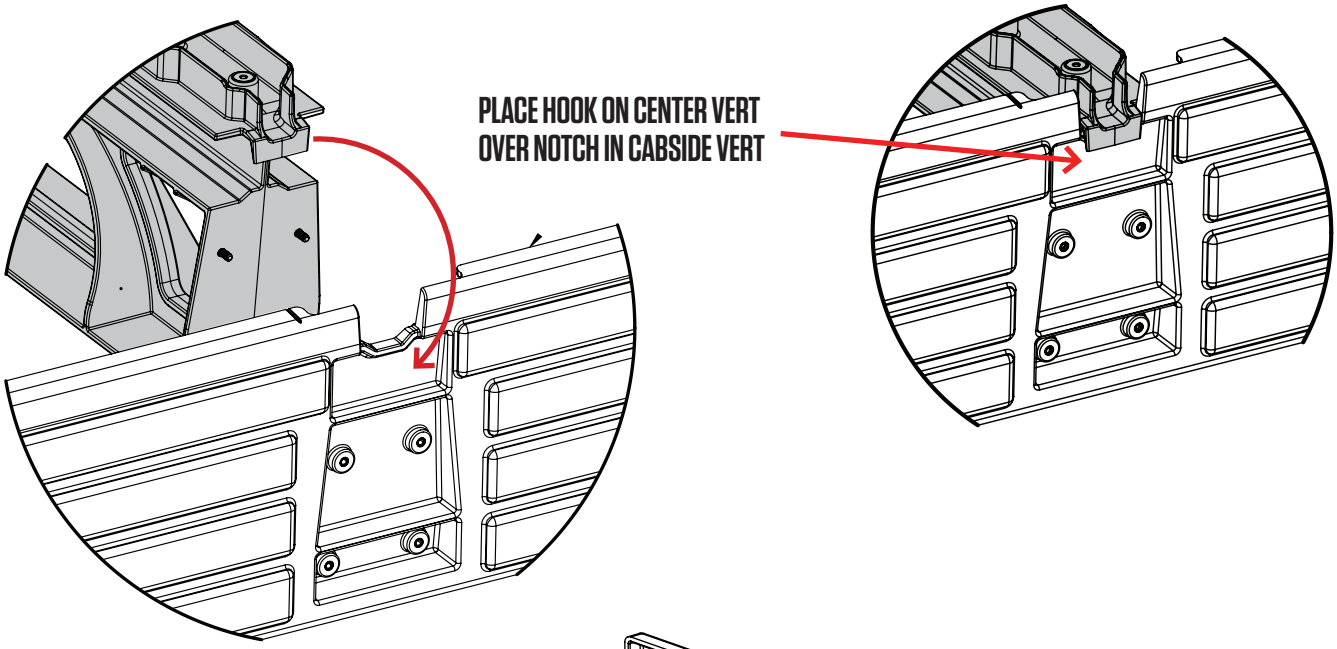

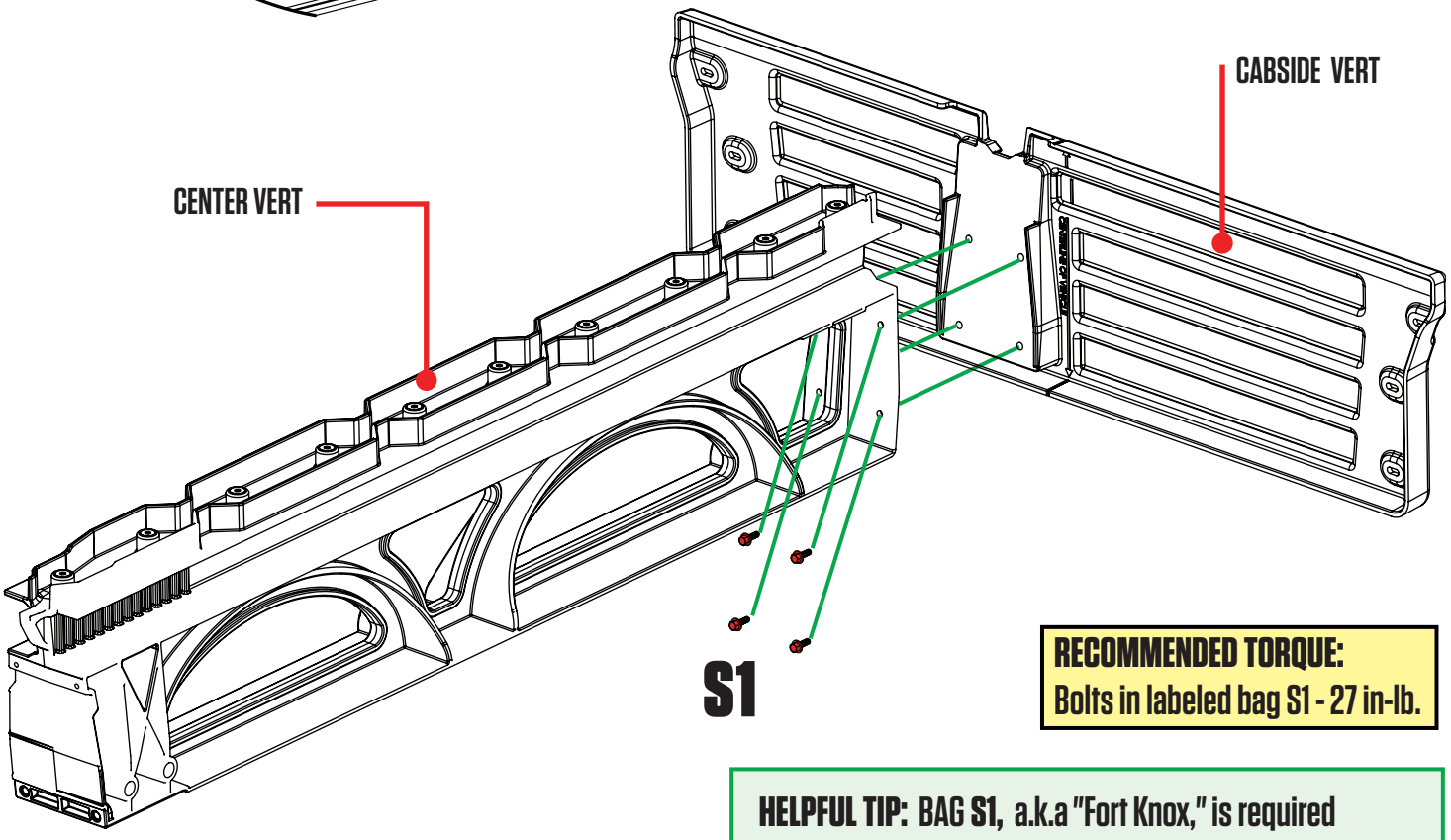

RECOMMENDED TORQUE:
Bolts in labeled bag S1 - 27 in-lb.

HELPFUL TIP: BAG **S1,** a.k.a "Fort Knox," is required for most of the steps, so keep it close! These bolts are highlighted throughout instructions in **RED.**

ASSEMBLY: LOOSELY ATTACH STUDS (YUP)

- **LOOSELY** attach studs to cabside vert with six bolts; **BAG S1.**

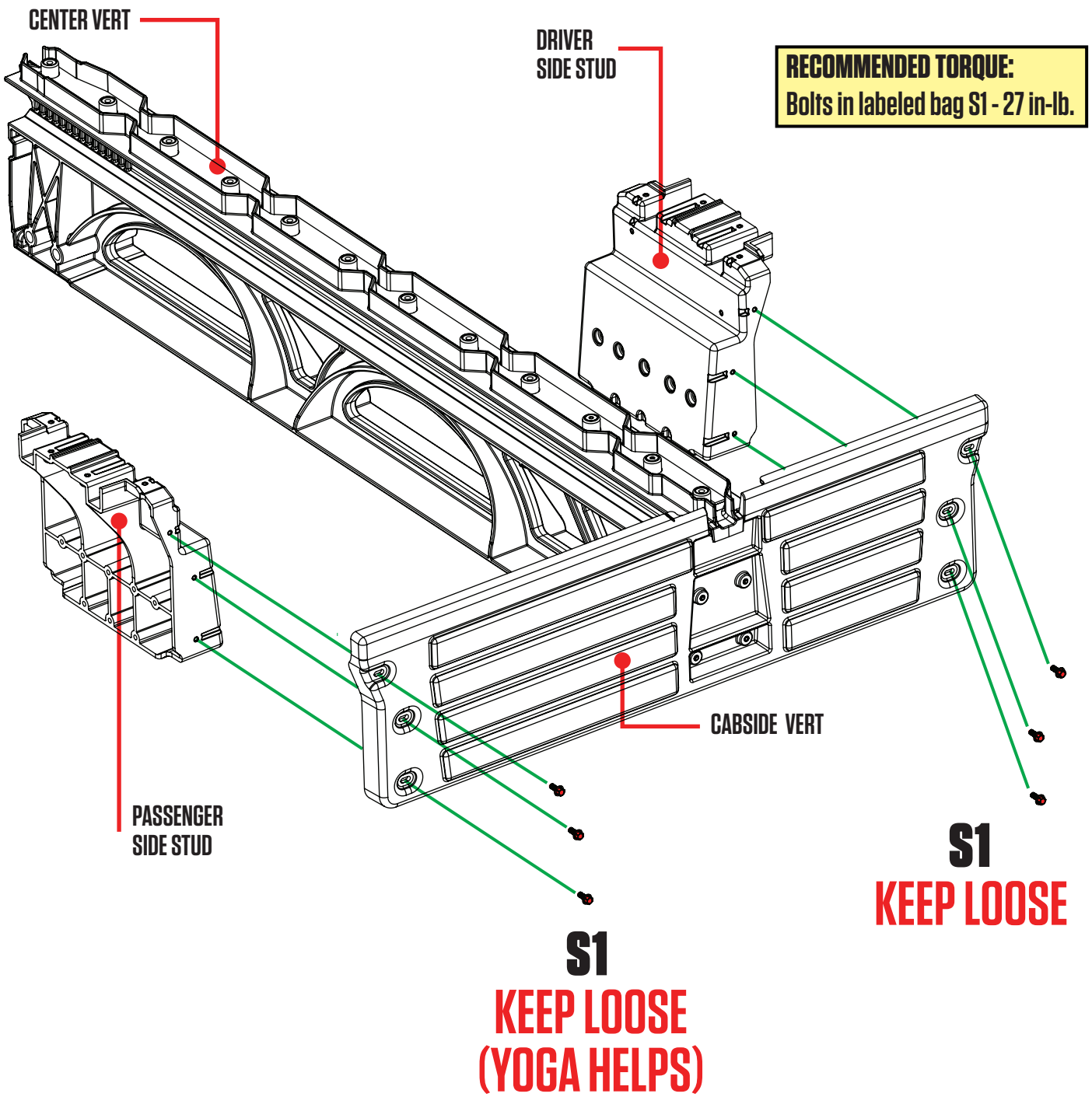

ASSEMBLY: ALIGN & TIGHTEN STUDS (YUP)

NOTE: This step ensures the studs are properly located before tightening bolts. It's important.

- Place ammo cans to support tailgate end of deck panels.
- Lift deck panels on center vert + stud + cabside vert assembly.
- Slide studs around L-R until deck panels are seated.
- **DETAIL A:** Loosely secure four bolts to hold decks onto studs; **BAG S1.**
- Now you can securely tighten the bolts that hold the studs to the cabside vert.
- Unbolt deck from studs, remove deck panels, save bolts, remove ammo cans and set aside for later assembly.

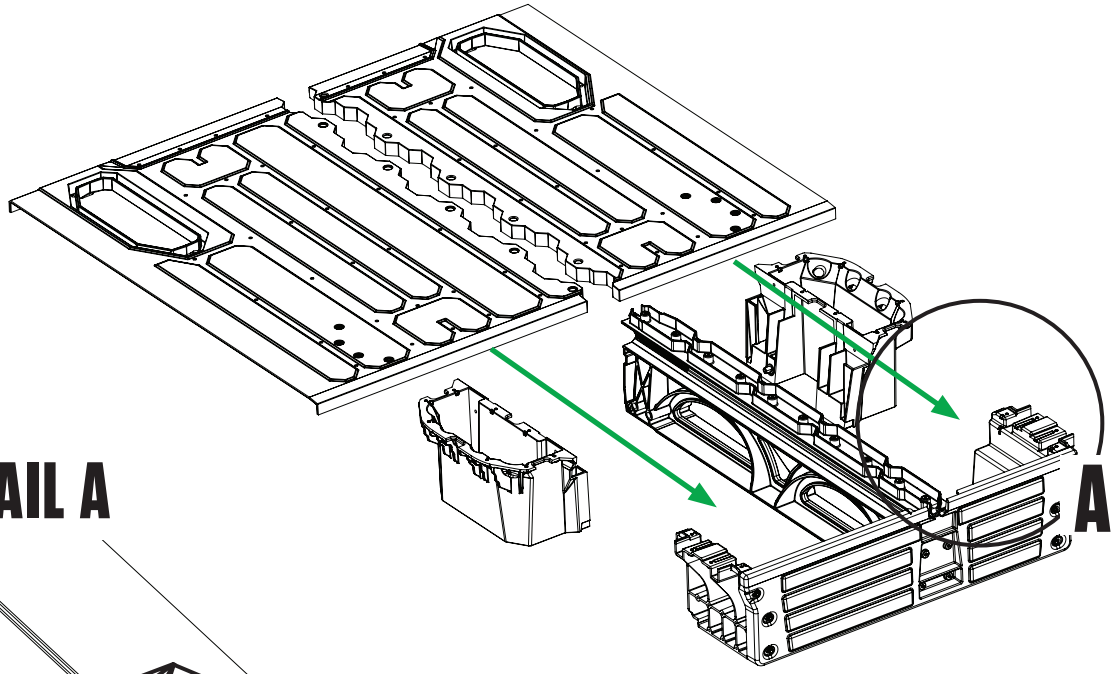

DETAIL A

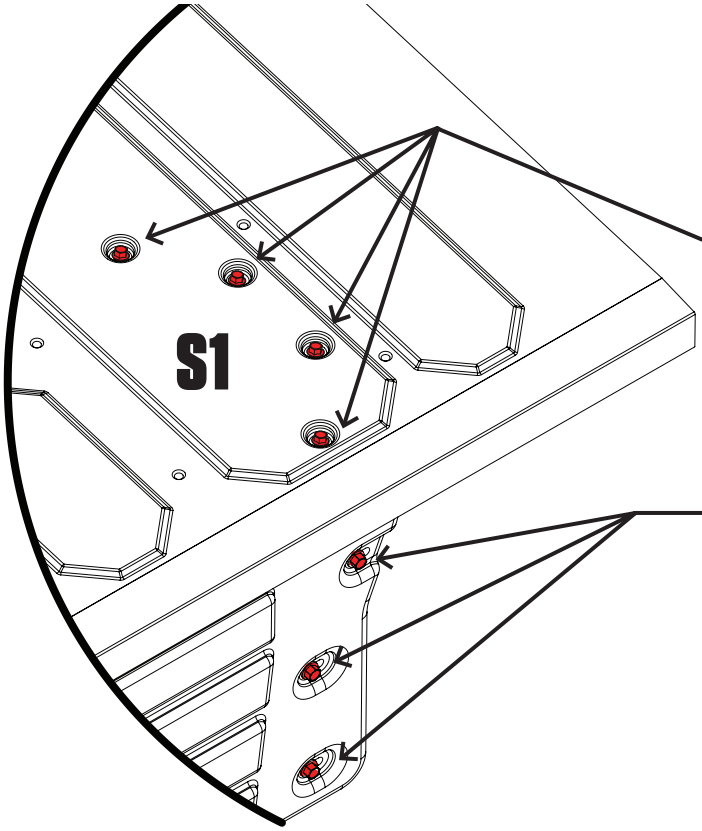

You will remove and save these bolts after tightening CABSIDE vert + stud bolts

Tighten and secure

RECOMMENDED TORQUE:
Bolts in labeled bag S1 - 27 in-lb.

HELPFUL TIP: This step seems like a waste of time, but Dr. DECKED says it's important...don't skip out.

PREP BED: MARK CABSIDE HOLES

- Temporarily place cabside vert + center vert + stud assembly in truck bed.
- **DETAIL B:** Make sure centerline arrow on cabside vert is aligned with your centerline mark (blue).
- **DETAIL A, DETAIL C:** Mark the truck bed via the pre-drilled holes in cabside vert.
- Remove assembly from truck bed.

DETAIL A

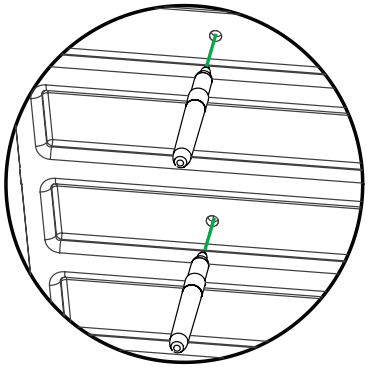

DETAIL B

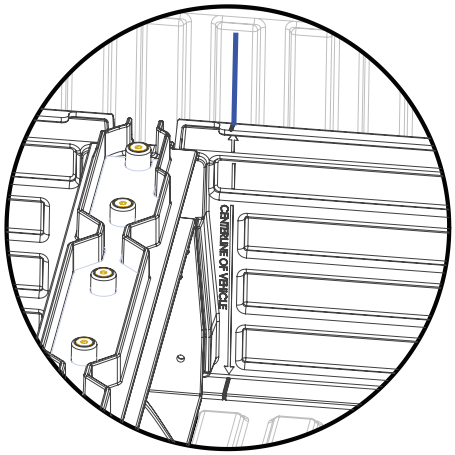

DETAIL C

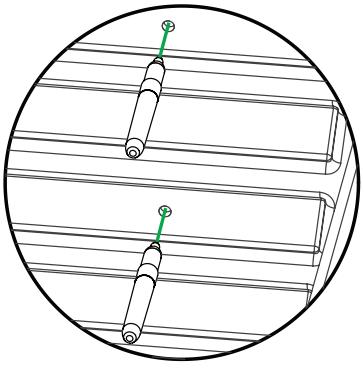

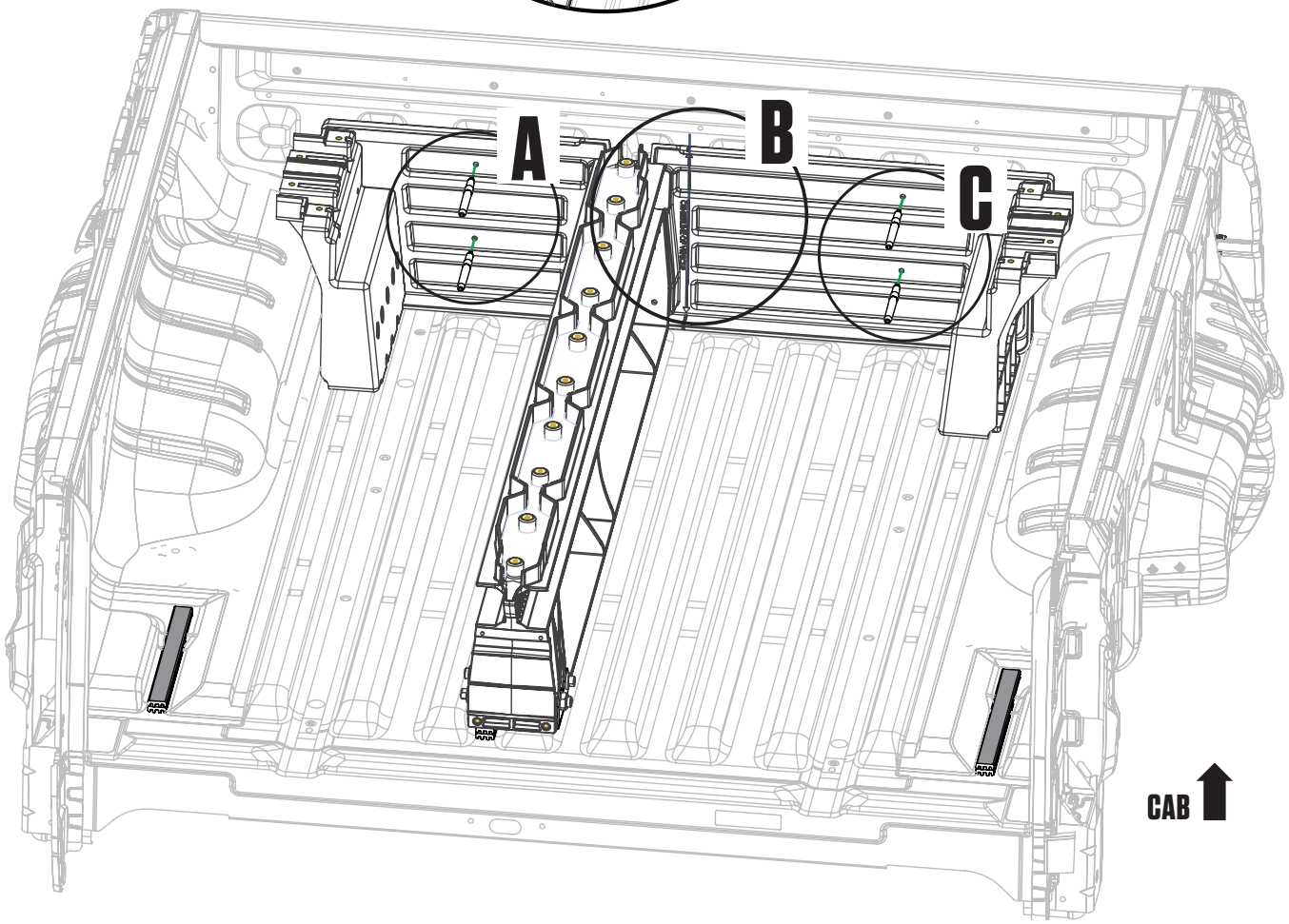

PREP BED: DRILL CABSIDE HOLES

- Drill four 7/16" holes at marked locations using a drill stop set to 1/4."
- **NOTE: To resist corrosion, seal the raw metal edges of the drilled holes with self-etching primer (available at most auto supply or hardware stores).**
- Install jacknut (yellow) onto jacknut wrench (orange) with 1" placement bolt; BAG **PREP MN3/MN4. NOTE: Do not use the slightly shorter dogpoint bolts also found in your PREP BAG.**
- **DETAIL A:** Insert jacknut into hole. While holding jacknut wrench, tighten bolt with 3/8" socket until jacknut is fully crimped. Remove bolt.
- Repeat on the remaining three holes.

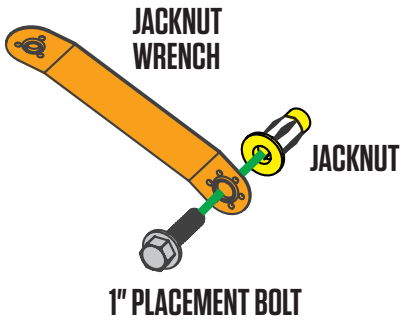

DETAIL A

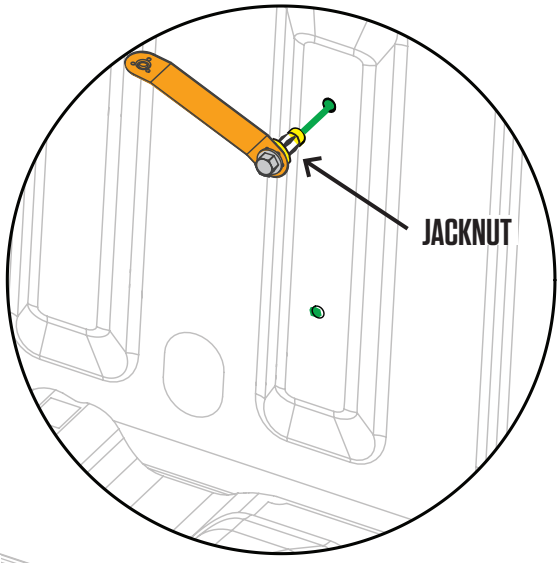

RECOMMENDED TORQUE:
To compress jacknut - 27 in-lb.

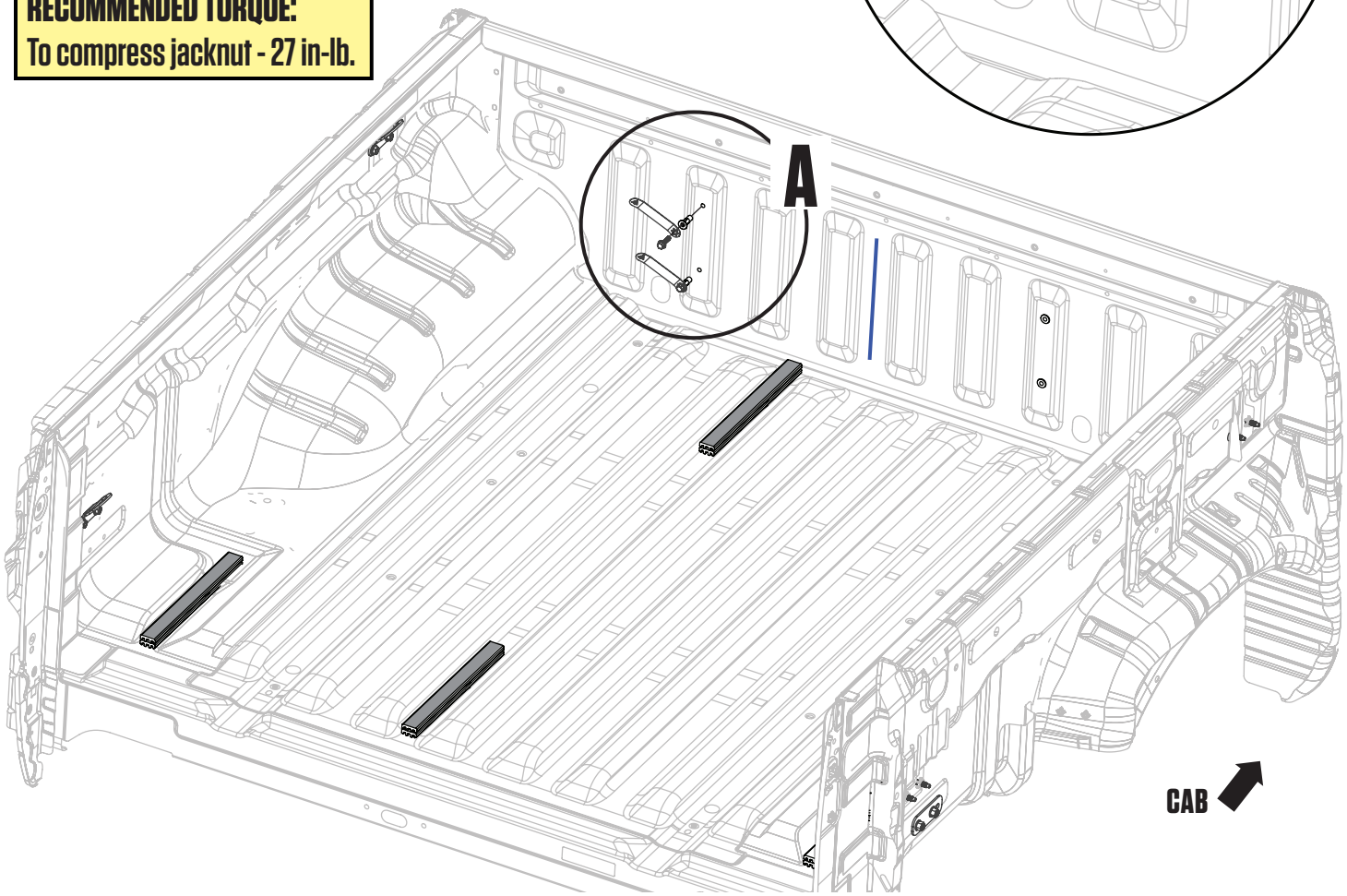

INSTALL: MOUNT ASSEMBLY

- Place cabside vert + center vert + stud assembly in truck bed.
- Secure assembly using two .905" dogpoint bolts and two washers; BAG **PREP MN3/MN4.**

NOTE: These are the same bolts as the dogpoint bolts in your S1 BAG.

- Repeat passenger side.

DETAIL A

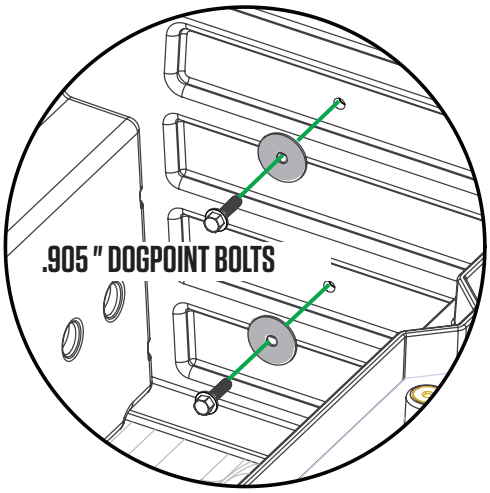

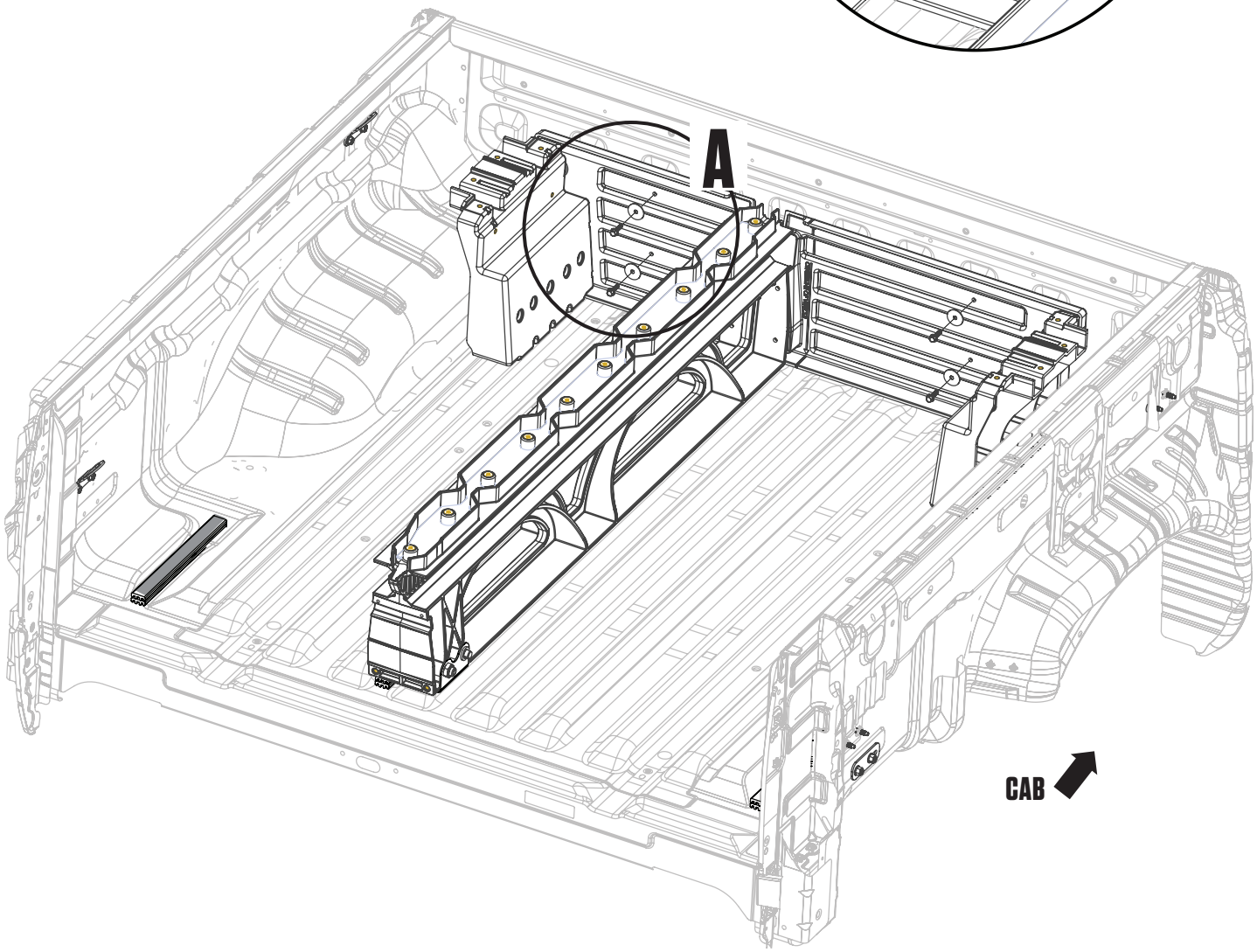

INSTALL: C-CHANNELS

IMPORTANT: There is a left and right ammo can. The inside of each ammo can is marked L or R.

- Loosely place driver side ammo can at tailgate corner of bed.
- Place driver side C-channel on ledge of stud and ammo can with end plate cabside.
- Install nylon washer only onto 4 S1 bolts and all S2 bolts; BAG **WASHERS**.
- **DETAIL A:** Insert two bolts through C-channel into ammo can and **loosely** fasten with nut; BAG **S2,** BAG **N1.**
- **DETAIL B:** Tightly attach C-channel to stud; **BAG S1.**
- Repeat passenger side.

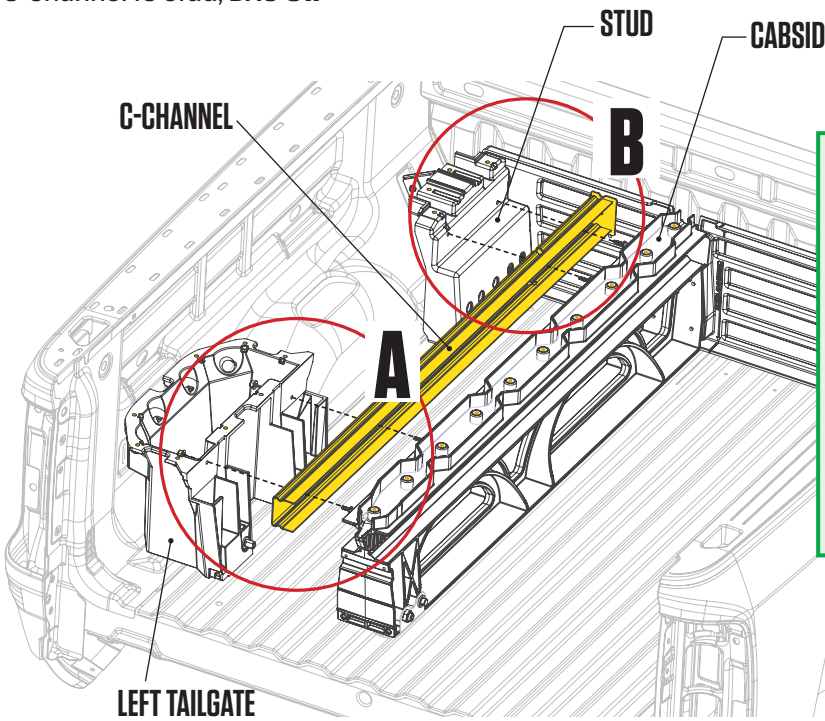

HELPFUL TIP: Make sure the LEFT ammo can is placed on the LEFT side, or you will have to take everything apart and start over. The inside of each ammo can is marked L or R.

DETAIL A
KEEP LOOSE

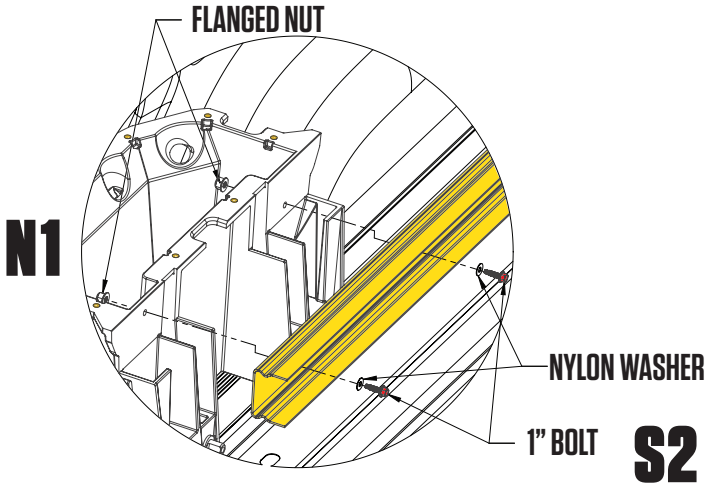

DETAIL B
TIGHTEN

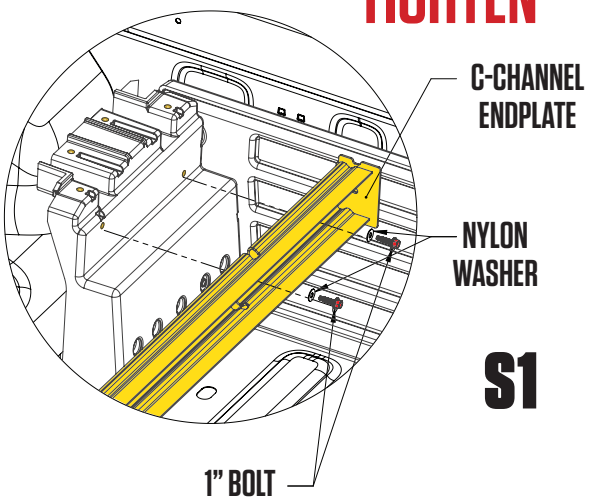

RECOMMENDED TORQUE: Bolts in S1 and S2 BAG - 27 in-lb.

INSTALL: DECK HALVES

- Loosely place deck panel on side stud, center vert and ammo can.
- Shift ammo can forward, rearward, L-R, as necessary to align with fully seated deck panel.
- Loosely assemble:
    - Five or six bolts (depends on bed length - NO WASHERS) through deck panel into center vert; **BAG S1.**
    - Four bolts with nylon and rubber washers installed as shown through deck panel into stud; **BAG S1, BAG WASHERS.**
    - Eight bolts with nylon and rubber washers installed as shown through deck panel into ammo can; **BAG S1, BAG WASHERS.**
    - Tighten all **S1** bolts.
    - Securely tighten C-channel/ammo can nuts and bolts.
- Repeat other side (making sure you don't forget to securely tighten C-channel/ammo can nuts and bolts).
- We have included extra washers - don't worry if you have leftovers.

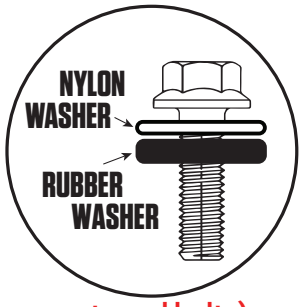

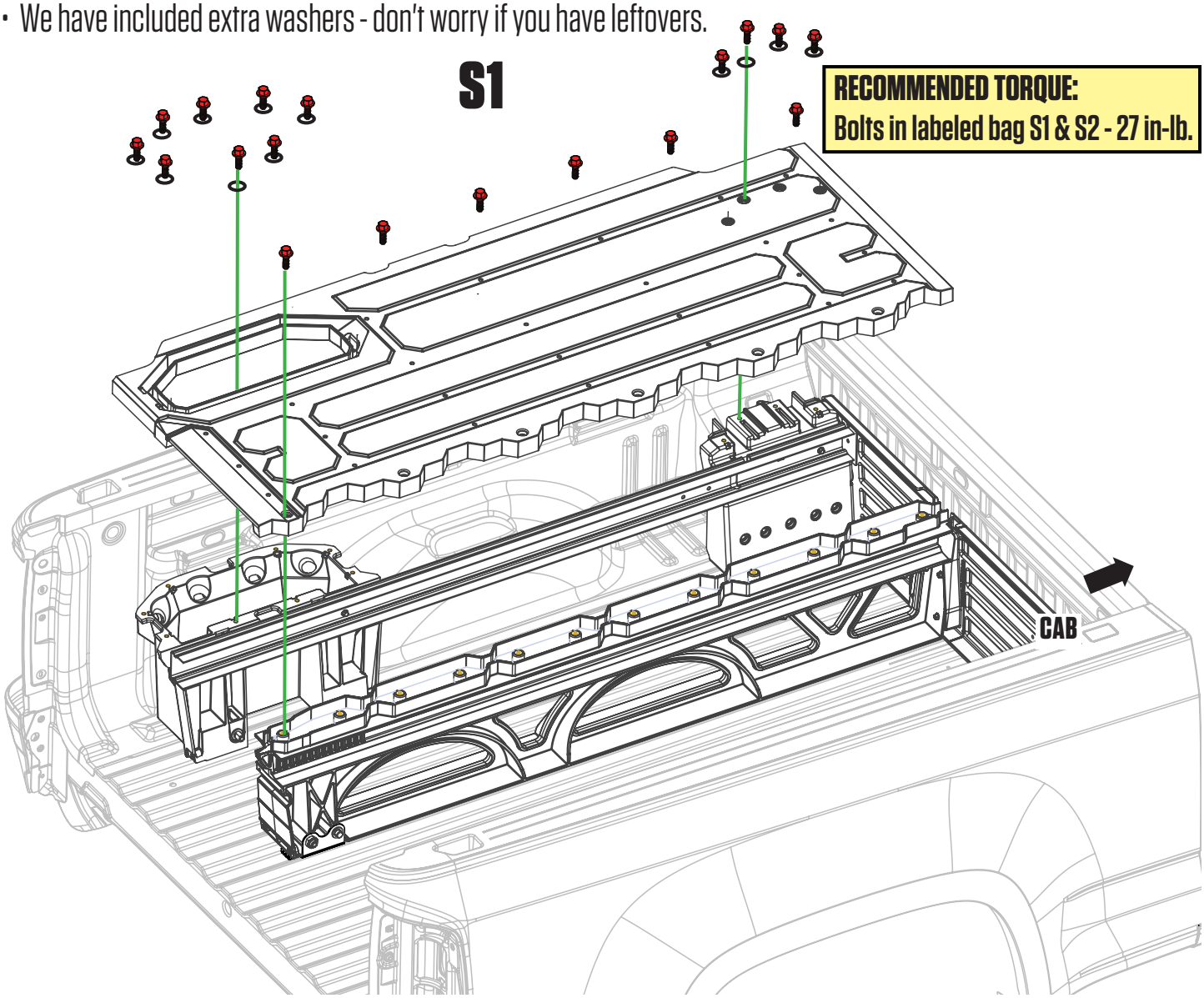

DRAWERS: BRACKETS + WHEELS

- Each drawer has a left and a right bracket. Bolt brackets into place via bottom two holes in bracket with 3/4" length bolts. Use the 2" length bolt for the upper cabside wall hole in bracket; BAG **DRAWER 1.**
- Install a tube brace in each drawer with two 3/4" length bolts; BAG **DRAWER 1,** BAG **DRAWER 2.**
- Attach wheels onto drawer brackets with a 7/32" hex wrench; BAG **WHEELS**

RECOMMENDED TORQUE:
Bolts in labeled bags DRAWER 1 and DRAWER 2 - 27 in-lb.
Bolts in labeled bag WHEELS - 90 in-lb.

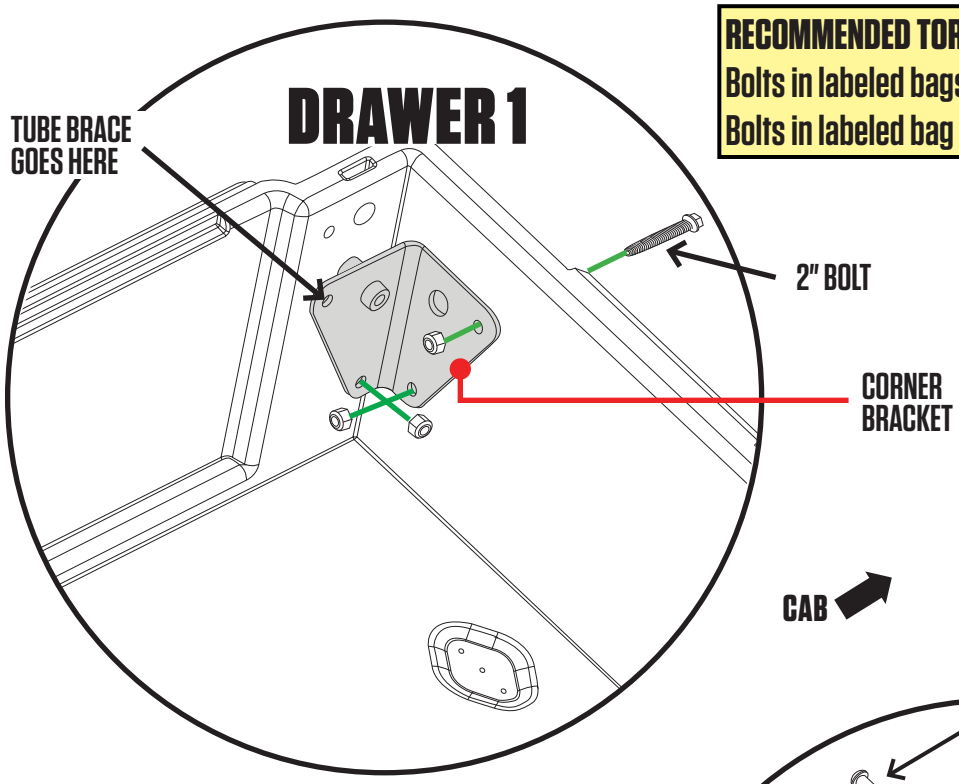

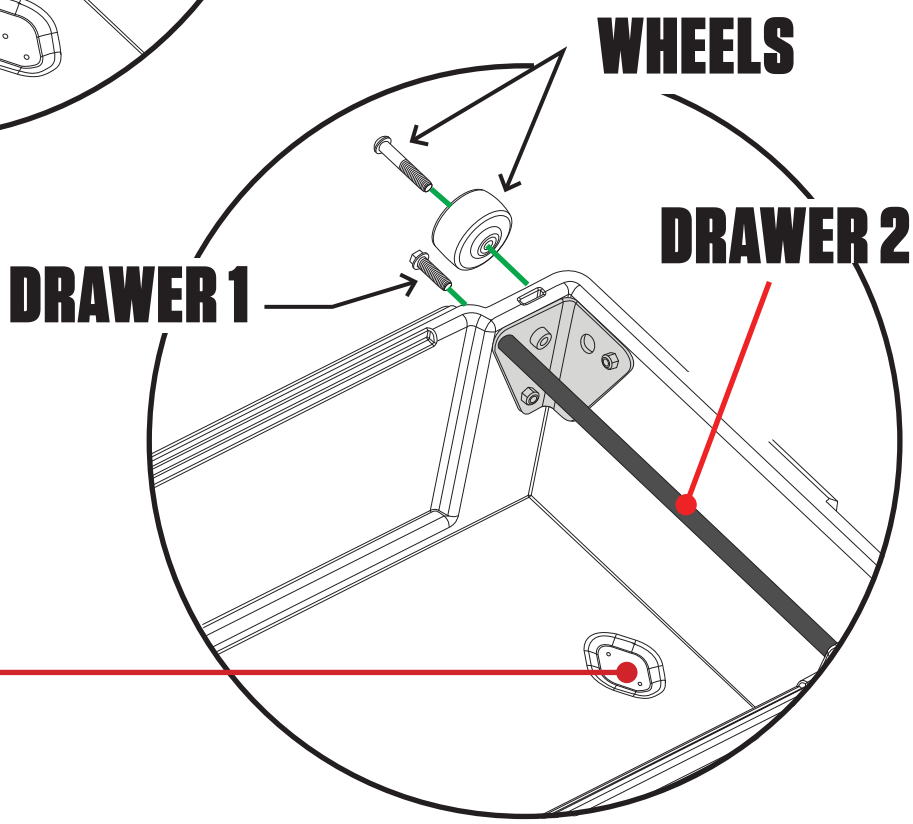

HELPFUL TIP: If you purchased drain plugs, install now (instructions are included with drain plugs).

DRAWERS: AXLE WHEELS + WEATHERSTRIPS

- Slide narrow drawer into driver side drawer cavity. **NOTE: It is easier to fully install narrow drawer first.**
- **DETAIL A:** Install two tailgate wheels onto narrow drawer axles with a 7/32" hex wrench; BAG **WHEELS.**
- Repeat with wide drawer.
- **DETAIL B:** Install weatherstrips on top of drawer edges ***WITH WIPER BLADE POINTING TOWARD DRIVER.***
  IMPORTANT: Facing the weatherstrip the wrong way will funnel water into drawer: BAD!

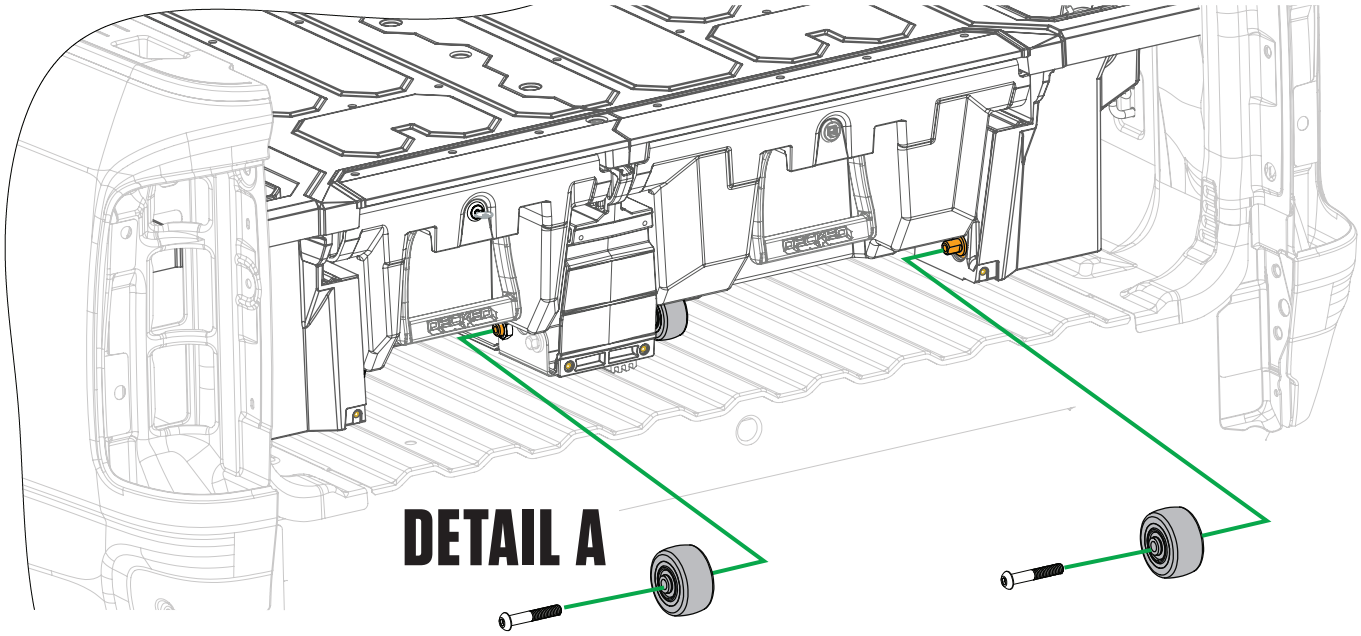

RECOMMENDED TORQUE:
Wheel bolts - 90 in-lb.

HELPFUL TIP: To make this step easier, jam a 2" piece of material under drawer, or get your pal to pinch the drawer up to the deck to give you better leverage.

HELPFUL TIP: Cut weatherstrips if they overhang.

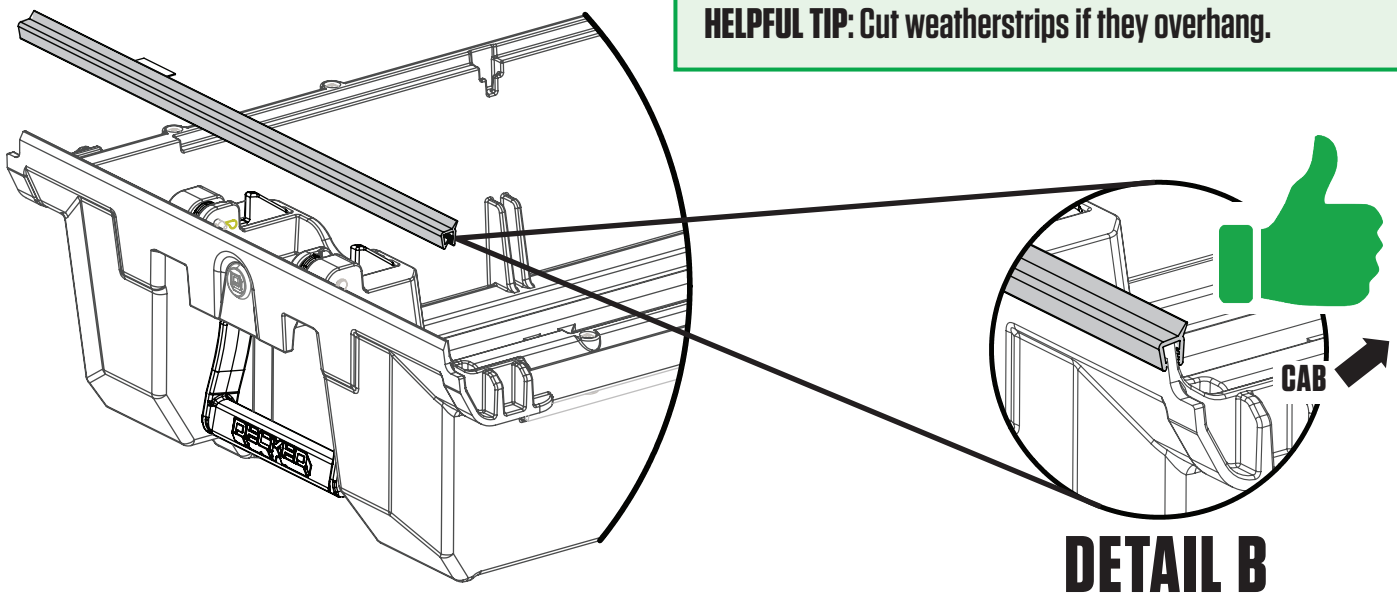

THE FUN STUFF: TORSION BRACE + BOTTLE OPENER

- Slide torsion brace under center vert and tailgate ammo cans.
- Loosely install:
  - Two 1/2" length bolts through upper holes in bottle opener into center vert; BAG **FINAL MID.**
  - Two bolts with nylon washers through the end holes in torsion brace into ammo cans; BAG **S1, WASHERS.**
  - Two bolts with nylon washers through the bottom bottle opener holes and torsion brace into center vert; BAG **S1, WASHERS.**
- Align bottle opener to edges of center vert and tighten four bottle opener bolts.
- Tighten end bolts into tailgate ammo cans.

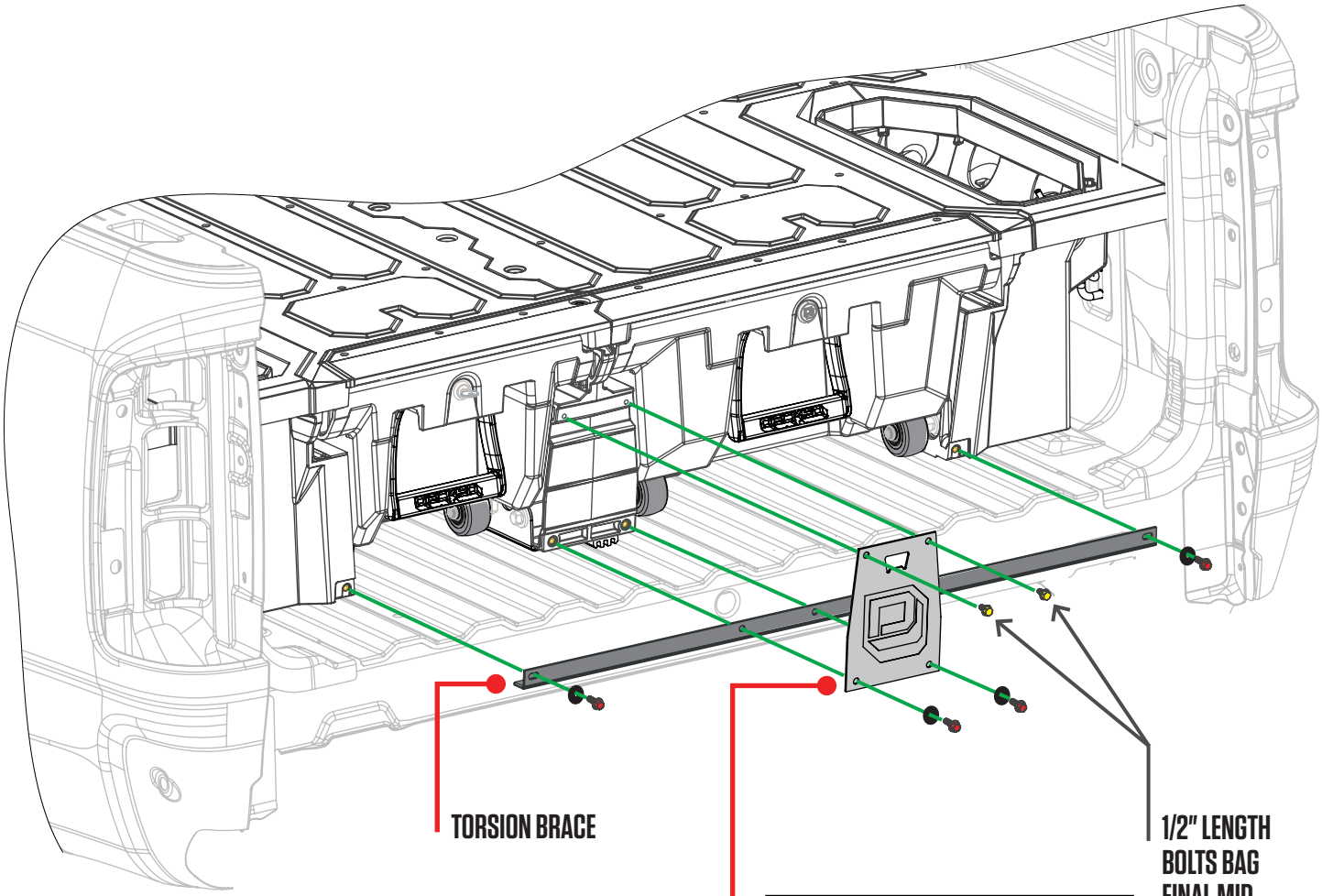

HELPFUL TIP: Bottle opener goes **outside** of torsion brace.

RECOMMENDED TORQUE:
Bolts in labeled bag S1 - 27 in-lb.

INSTALL: J-HOOKS

- Install J-hook onto tie down bracket and through second closest **tailgate** side hole in ammo can; **BAG J7.**
- Install winged-spherical nut-washer, round side down, onto J-hook and partially tighten using your fingers only.

IMPORTANT: Keep J-hook assembly loose.

- Repeat other side.
- Tighten the J-hooks, but **DO NOT OVERTIGHTEN!** Make sure the gap between the side wall of the bed and the deck is equal on both sides.
- Install bolt thread protectors on J-hook ends; **BAG FINAL MID.**

LEFT AMMO CAN

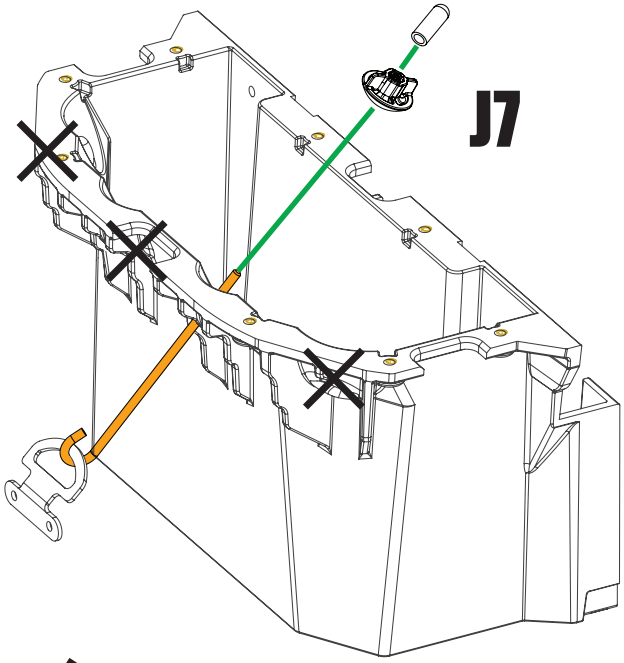

RIGHT AMMO CAN

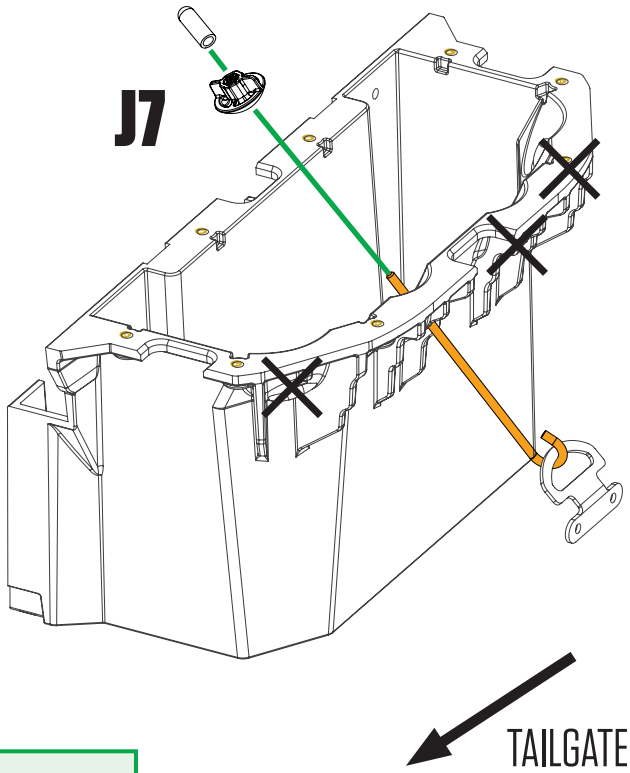

HELPFUL TIP: Make sure the hooks open toward tailgate.

IMPORTANT: You're almost there, so get your favorite beverage ready to crack open in the bottle opener and make a toast to your truck. When finished, immediately post a photo of your significant other, child or canine (in no order of significance - please someone show us your pet alligator) appreciating your accomplishment. Add hashtag #DECKEDUSA | @DECKEDUSA.

FINAL STEPS: THE RULER

- Install ruler with six 1/8" hex screws; **BAG FINAL MID**. Start screws with fingers to avoid cross-threading. Tighten just until snug. Overtightening will strip the inserts.

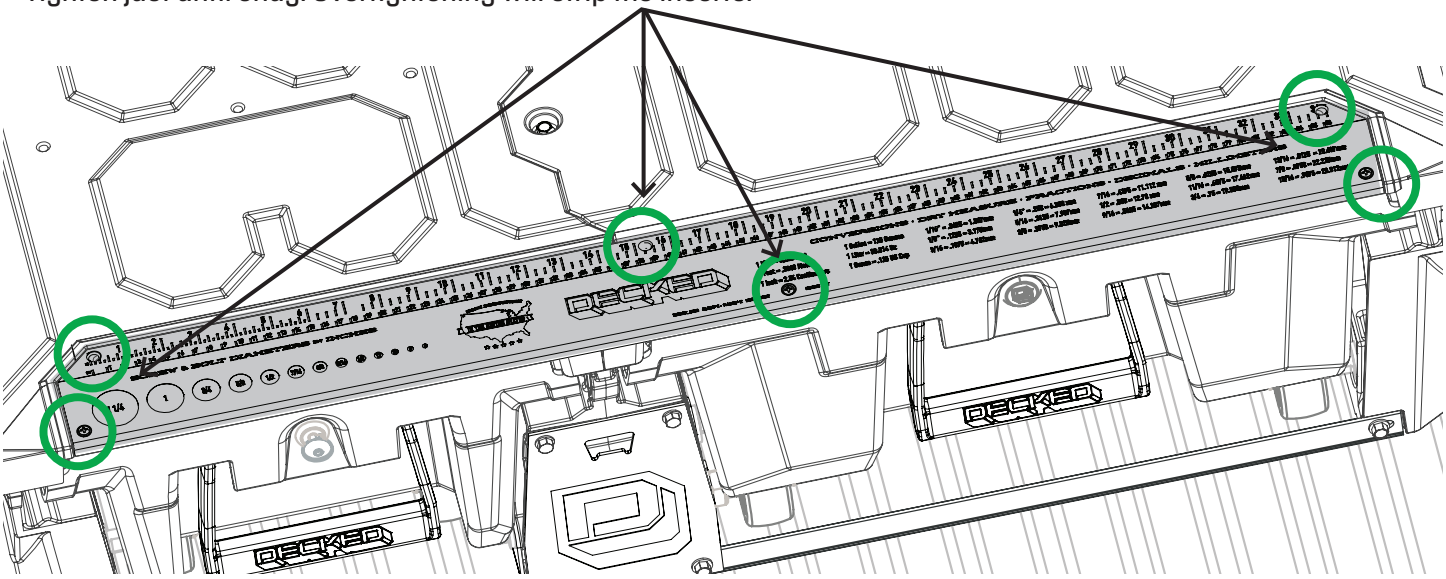

FINAL STEPS: AMMO CAN LIDS

- **DETAIL A:** Ammo can lids are left (marked L) and right (marked R) side specific.
- **DETAIL B:** Holding lid in orientation shown, insert tab on tailgate end of ammo can lid and push the cabside end of lid down to secure. Don't be afraid to push down hard.
- Insert lock hole plugs, unless you are fitting the optional drawer locks, in which case install drawer locks now (instructions with locks); **BAG FINAL MID.**

DETAIL A

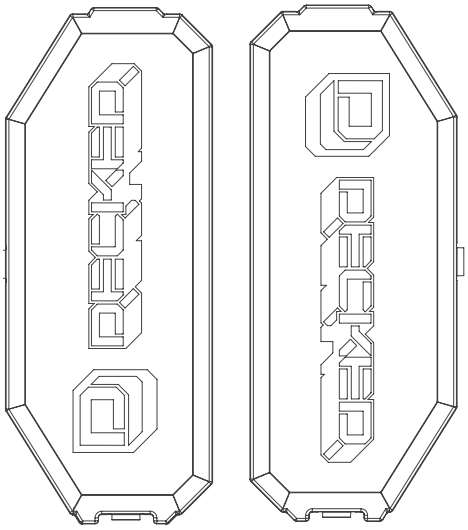

LEFT AMMO CAN LID

RIGHT AMMO CAN LID

DETAIL B

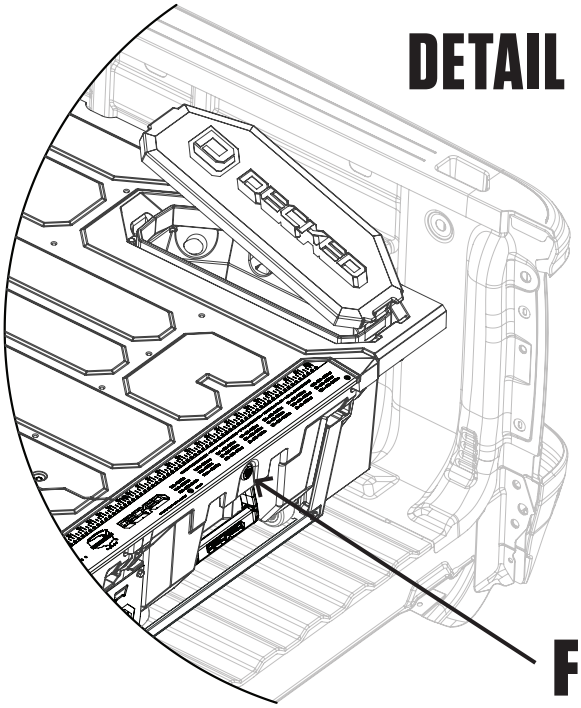

FINAL MID

DECKED 3-YEAR LIMITED WARRANTY

And now....a word from our lawyers.

DECKED LLC warrants to the original purchaser of this product that the product will be free from manufacturing defects in workmanship and materials for a period of three (3) years from the date of the original purchase. If within three (3) years from the original date of purchase this product fails due to defect in materials or workmanship, DECKED LLC will replace any defective part at its option.

The original purchaser must contact the DECKED LLC customer service team and provide a description of the defective part, including digital pictures if requested, with the original purchase documentation as validation of warranty coverage or have previously activated their warranty online.

This warranty DOES NOT cover or apply to:

- Damage to the product due to misuse, mishandling and abuse.
- Products not used in accordance with the manufacturer's instructions or recommendations.
- Product not assembled or installed according to manufacturer's instructions.
- Normal wear and tear.
- Undeclared damage to the system during shipping, acts of God. In addition, consequential damage and incidental damages (including lost time) such as damage to persons or property are not covered under this warranty.

REGISTER YOUR PRODUCT FOR ANY FUTURE WARRANTY NEEDS. **DECKED.COM/REGISTER**

#DECKEDUSA | @DECKEDUSA